JHW6S.5T03

1/2T Spreader

PRODUCT DETAILS

- Designed to operate in confined space where expansion is needed
- Compact size makes for easy use in hard to reach places
- Positive over travel stops and return spring
- Connects directly to pump hose with high flow coupler
- Maximum working pressure: 10,000 psi/ 700 bar

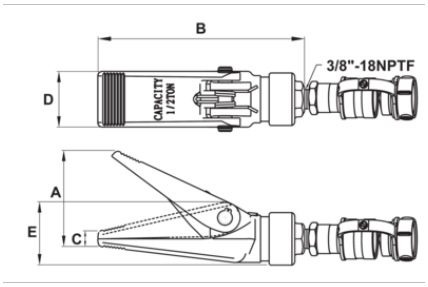

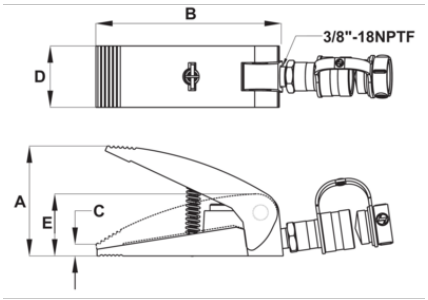

PRODUCT ATTRIBUTES

Product				A	B	C	D	E
JHW6S.5T03	0.5 t	1.22 in	0.58 in^3	3.54 in	7.57 in	0.51 in	2.05 in	2.36 in