JHW8V38R
Pressure Relief Valve

PRODUCT DETAILS

- Industrial Hydaulic Equipment
- Flow control Valves

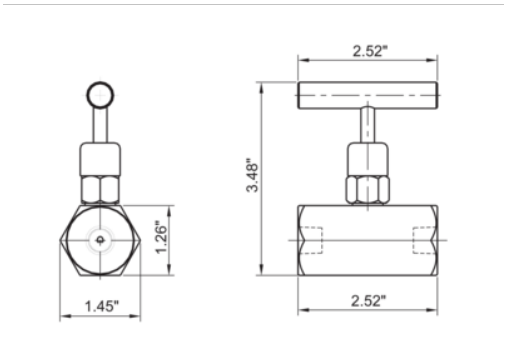

PRODUCT ATTRIBUTES

Product	
JHW8V38R	3/8"-18NPTF